Spectra Par 30HEX20 PRO Exterior Fixture

User Manual

Order code: LEDJ311

WARNING

FOR YOUR OWN SAFETY, PLEASE READ THIS USER MANUAL CAREFULLY BEFORE YOUR INITIAL START-UP!

- Before your initial start-up, please make sure that there is no damage caused during transportation.
- Should there be any damage, consult your dealer and do not use the equipment.
- To maintain the equipment in good working condition and to ensure safe operation, it is necessary for the user to follow the safety instructions and warning notes written in this manual.
- Please note that damages caused by user modifications to this equipment are not subject to warranty.

CAUTION!
TAKE CARE USING THIS EQUIPMENT!
HIGH VOLTAGE-RISK OF ELECTRIC SHOCK!!

IMPORTANT:

The manufacturer will not accept liability for any resulting damages caused by the non-observance of this manual or any unauthorised modification to the equipment.

- Never let the power cable come into contact with other cables. Handle the power cable and all mains voltage connections with particular caution!
- Never remove warning or informative labels from the unit.
- Do not open the equipment and do not modify the unit.
- Do not connect this equipment to a dimmer pack.
- Do not switch the equipment on and off in short intervals, as this will reduce the system's life.
- Do not expose to flammable sources, liquids or gases.
- Always disconnect the power from the mains when equipment is not in use or before cleaning! Only handle the power-cable by the plug. Never pull out the plug by pulling the power-cable.
- Make sure that the available mains supply voltage is between 100~240V AC, 50/60Hz.
- Make sure that the power cable is never crimped or damaged. Check the equipment and the power cable periodically.
- If the equipment is dropped or damaged, disconnect the mains power supply immediately and have a qualified engineer inspect the equipment before operating again.
- If your product fails to function correctly, stop use immediately. Pack the unit securely (preferably in the original packing material), and return it to your Pro Light dealer for service.
- Only use fuses of same type and rating.
- Repairs, servicing and power connection must only be carried out by a qualified technician. THIS UNIT CONTAINS NO USER SERVICEABLE PARTS.
- This lighting fixture is for professional use only - it is not designed for or suitable for household use. The product must be installed by a qualified technician in accordance with local territory regulations. The safety of the installation is the responsibility of the installer. The fixture presents risks of severe injury or death due to fire hazards, electric shock and falls.
- Warning! Risk Group 2 LED product according to EN 62471. Do not view the light output with optical instruments or any device that may concentrate the beam.
- WARRANTY: One year from date of purchase.

OPERATING DETERMINATIONS

If this equipment is operated in any other way, than those described in this manual, the product may suffer damage and the warranty becomes void. Incorrect operation may lead to danger e.g: short-circuit, burns and electric shocks etc.

Do not endanger your own safety and the safety of others!

Incorrect installation or use can cause serious damage to people and/or property.

PLEASE READ THE BELOW CAREFULLY BEFORE USING THE FIXTURE IN OUTDOOR/EXTREME ENVIRONMENTS

IP Rating:

The IP (International Protection) rating classifies and rates the degree of protection provided against intrusion of foreign objects such as dust and water into housings and electrical enclosures.

The rating consists of the letters IP followed by two digits (i.e. IP65) where the numbers define the level of protection. The first digit (solids) stands for the level of protection the enclosure provides against solid bodies, whilst the second digit (liquids) stands for the degree of protection of the equipment inside the enclosure against water.
An IP65 rated fixture is one which has been designed and tested to protect from all ingress of dust (6) and water projected by low pressure jets (6.3mm) from any angle (5).

Marine/Coastal Installations:

Although this fixture has an IP rating it is NOT suitable for installation in a coastal/marine environment. Installing this fixture in a coastal/marine environment could cause corrosion and excessive wear to the internal and/or external components. Any damages, faults or performance issues resulting from the installation in one of the environments listed above will void the manufacturers warranty and will NOT be subject to any warranty claims, parts or repairs.

IMPORTANT INFORMATION!

If this fixture is installed in extreme outdoor and/or wet conditions, it MUST be powered ON and operated for a minimum of 30 minutes every 1-2 weeks. Excessive usage in extreme outdoor and/or wet conditions without a consistent usage cycle as described above can lead to component damage and/or a reduced fixture lifetime. Any damage to the fixture found to be a direct result of not following the above guidelines will void the manufacturers warranty and will NOT be subject to any warranty claims, parts or repairs.

Please ENSURE all connections are sealed with the rubber caps if provided and the correct cables are used and connected correctly to prevent dust and/or water ingress, condensation and/or corrosion.

Spectra Par 30HEX20 PRO Exterior Fixture

IP65

The Spectra Par 30HEX20 PRO features 30 x 20W six-colour LEDs, delivering a smooth wash of colour, ranging from intense, rich saturated hues through to pastel shades. Three individually controllable concentric rings allow for even more versatility creating mesmerising eye-candy effects. Controllable via the onboard 4 button OLED menu system for auto, static colour or primary/secondary modes, with the option of DMX control for larger projects. The silent running, convection cooled heavy-duty alloy enclosure features PowerTwist TR1 and 5-Pin DMX inputs and outputs to facilitate a problem-free, rental-ready connection.

- 30 x 20W six-colour LEDs (RGBALC)
- Beam angle: 20°
- Refresh rate: 1kHz, 3kHz, 6kHz or 12kHz selectable
- Pixel zone mapping
- DMX channels: 6/8/12/18/20 or 30 selectable
- RDM (Remote Device Management)
- Static colour, colour change, colour fade and primary/secondary modes
- 0 - 100% dimming
- Variable strobe
- Bracket allows for multiple rigging or floor standing applications
- Quick release omega clamp included
- 4 button menu with OLED display
- PowerTwist TR1 input/output
- IP rated 5-Pin XLR input/output
- Convection cooled

Specifications	Spectra Par 30HEX20 PRO Exterior Fixture
Power consumption	179W
Power supply	100~240V, 50/60Hz
IP rating	IP65
Dimensions	370 x 393 x 145mm
Weight	8.4kg
Order code	LEDJ311

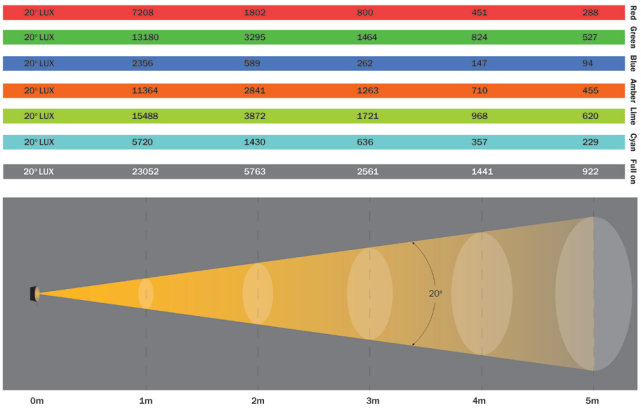

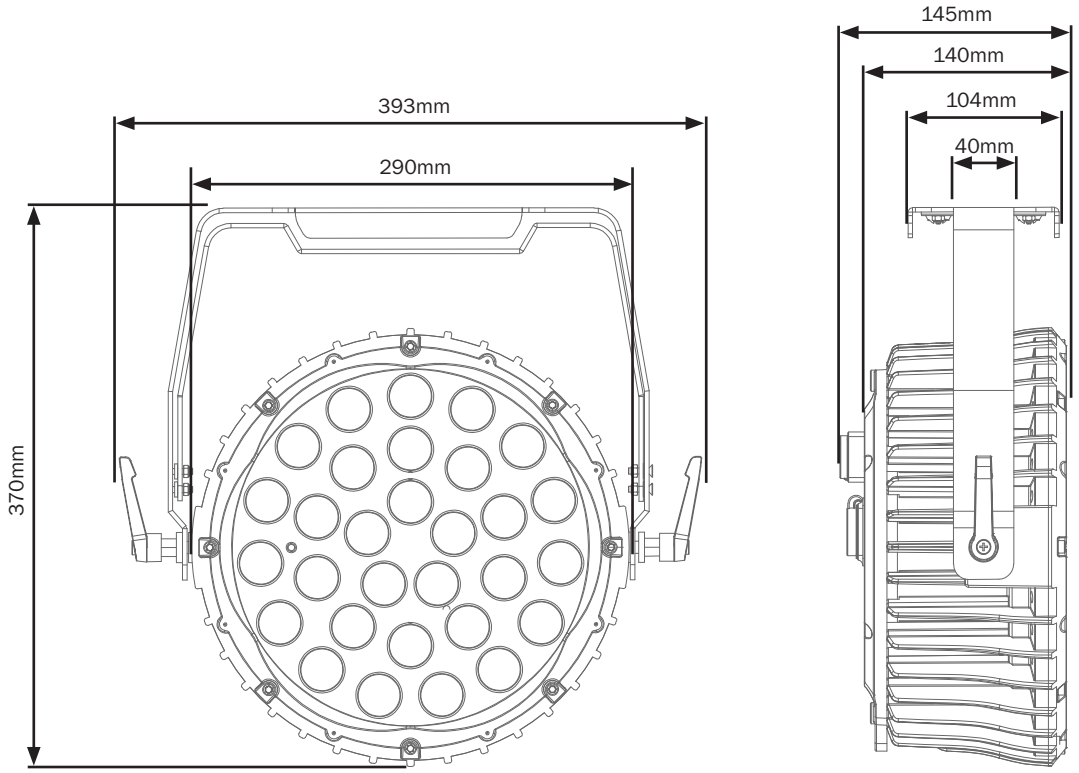

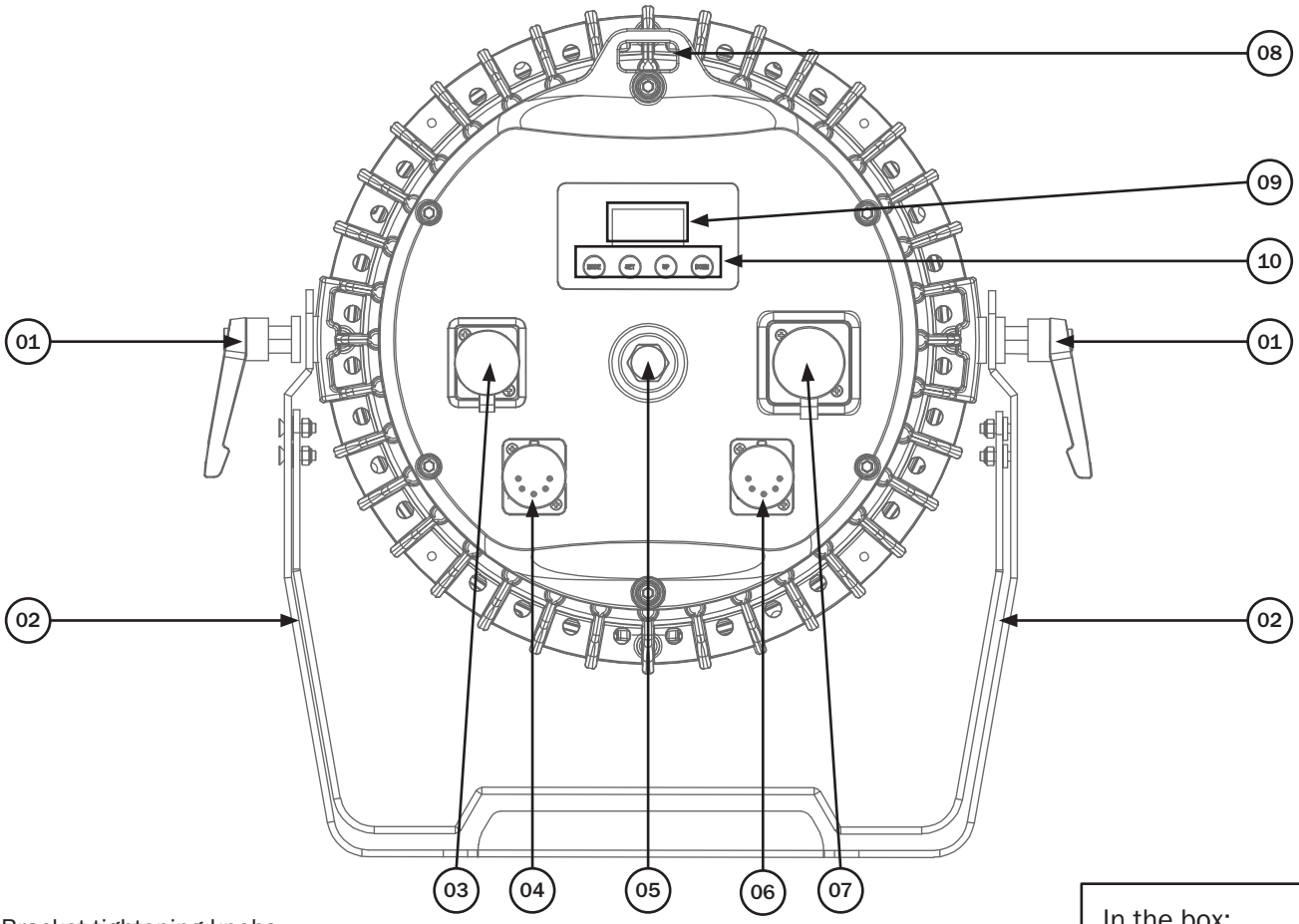

01 - Bracket tightening knobs
02 - Bracket
03 - PowerTwist TR1 input
04 - IP rated 5-Pin XLR input
05 - Pressure relief valve
06 - IP rated 5-Pin XLR output
07 - PowerTwist TR1 output
08 - Safety eye
09 - OLED display
10 - Function buttons

In the box:
1 x fixture,
1 x omega clamp
& 1 x power cable

Before installing the fixture, the supporting structure (ie. truss) must be able to hold a minimum of 10 times the fixtures weight without any deformation (eg. 15kg - 150kg point load). The fixture must be secured with a secondary safety attachment when being installed (ie. an appropriate safety cable). Never stand directly below the fixture when mounting, removing, and/or servicing.

Overhead installation requires experience and qualifications to calculate working load limits, the material being used at the installation area and periodic safety inspections of the fixture and installation material. If you do not have the relevant experience and/or qualifications please do not attempt the installation yourself. The installation should be checked annually by a qualified person.

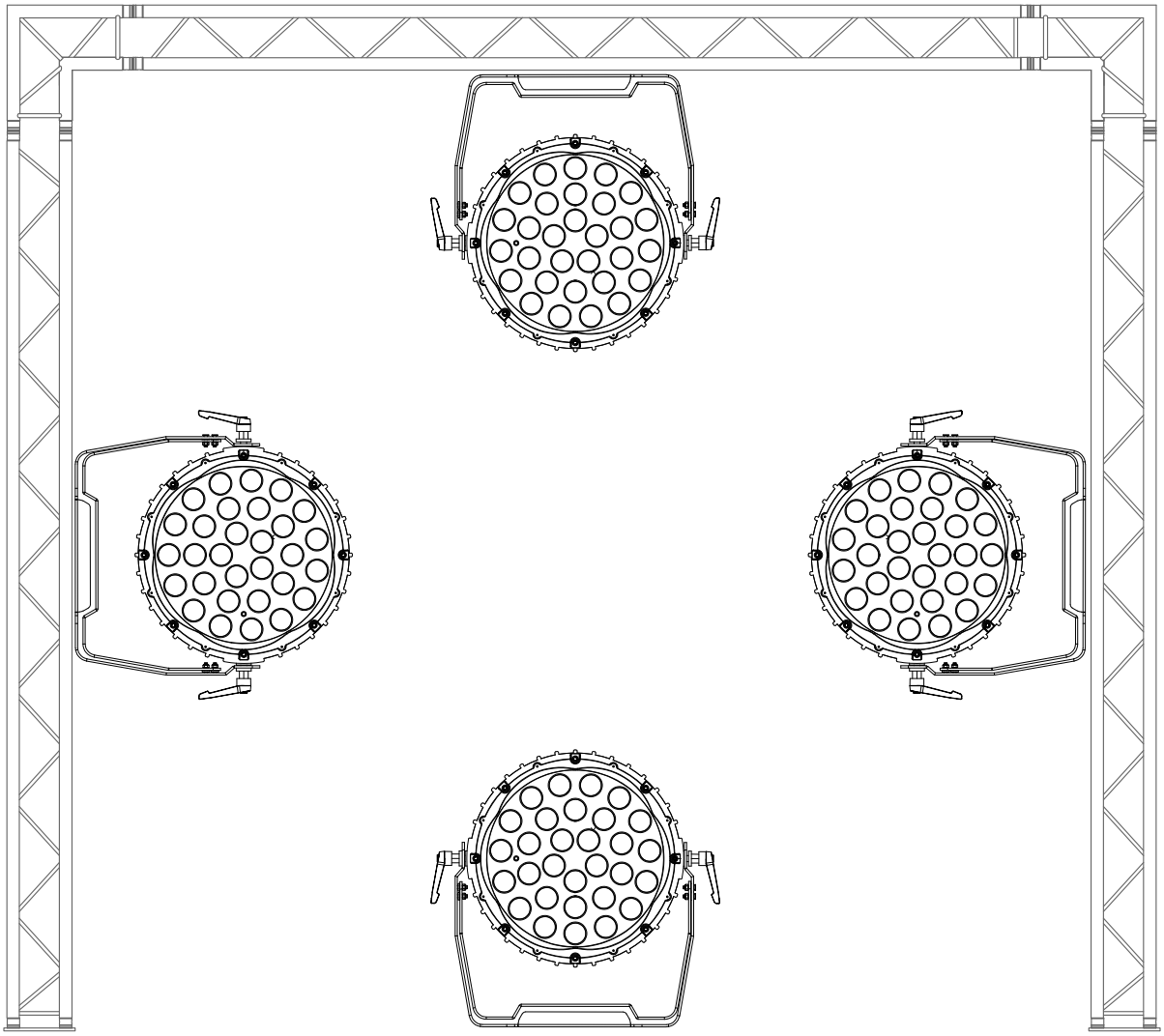

The Spectra Par 30HEX20 PRO Exterior Fixture can be operated in a number of mounting positions as shown in the diagram above, hanging upside-down from the ceiling or truss, mounting sideways on truss or stood upright on a flat level surface. Always use a safety wire as an extra safety precaution to prevent damage/injury in the event a clamp fails (see the next page for clamp installation). Never use the carry handles for secondary attachments.

Installation:

1. Fasten each clamp to the omega clamps with a bolt and lock nut through the hole in the omega clamp.
2. Align and insert the omega clamps quick-lock fasteners with the respective holes on the bottom of the unit.
3. Tighten both locking fasteners clockwise on each omega clamp ensuring they're fully secure.
4. Mount the fixture onto your truss system via the clamps and tighten to ensure secure.
5. Pull the safety cable through the safety cable holes located on the top rear of the fixture and around the truss.

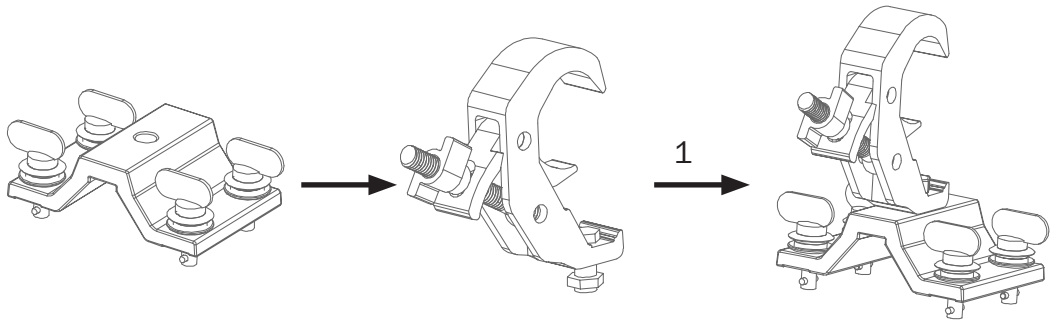

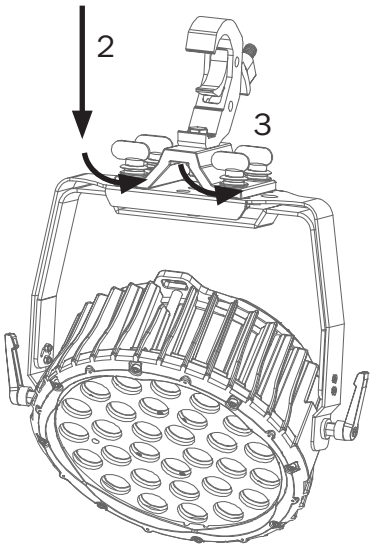

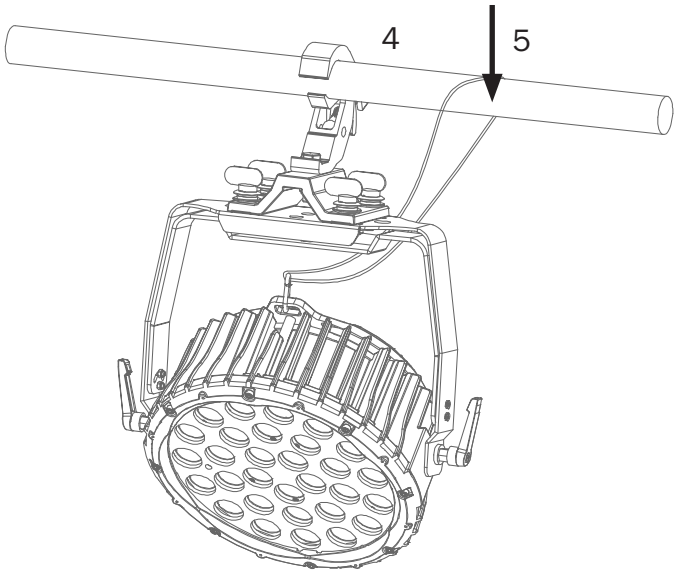

IMPORTANT! PLEASE NOTE: The OLED display for this fixture has a menu locking function where after 30 seconds of inactivity it will lock. To unlock the menu hold the "**MODE**" and "**SET**" buttons for 3 seconds.

Main Menu	Sub Menu	Options/Values			Description
1. DMX	Address	**001**-512			DMX Address Setting
	Channels	**06 (6 channel mode)**			DMX Channel Modes
		08 (8 channel mode)			
		12 (12 channel mode)			
		18 (18 channel mode)			
		20 (20 channel mode)			
		30 (30 channel mode)			
2. Dimmer	Color All	1. All Red	000-**255**		Dimming Mode
		2. All Green	000-**255**		
		3. All Blue	000-**255**		
		4. All Amber	000-**255**		
		5. All Lime	000-**255**		
		6. All Cyan	000-**255**		
	Color Ring	Ring 1	1. Red 1	000-**255**	
			2. Green 1	000-**255**	
			3. Blue 1	000-**255**	
			4. Amber 1	000-**255**	
			5. Lime 1	000-**255**	
			6. Cyan 1	000-**255**	
		Ring 2	1. Red 2	000-**255**	
			2. Green 2	000-**255**	
			3. Blue 2	000-**255**	
			4. Amber 2	000-**255**	
			5. Lime 2	000-**255**	
			6. Cyan 2	000-**255**	
		Ring 3	1. Red 3	000-**255**	
			2. Green 3	000-**255**	
			3. Blue 3	000-**255**	
			4. Amber 3	000-**255**	
			5. Lime 3	000-**255**	
			6. Cyan 3	000-**255**	
3. Auto		**Yes**			Auto Mode
		No			
4. Program	Mode	**01**-22			Built-in Programs
	Color	**01**-47 (when mode is 01)			Colour
	Speed	1-100 (**81**) (when mode is 02-22)			Speed
	Strobe	**0**-99			Strobe

Main Menu	Sub Menu	Options/Values	Description
5. Slave		**Yes**	Primary/secondary Mode
		No	
6. Settings	1. Curves Select	Linear	Dimming Curve Setting
		Square Law	
		Inv Square Law	
		S-Type	
	2. Dimmer Speed	**Fast**	Dimming Speed Setting
		Smooth	
	3. Display	**Normal**	Display Direction Setting
		Inverted	
	4. PMW Frequency	12K	Refresh Rate Setting
		6K	
		3K	
		1K	
	5. DMX Fail	**Off**	DMX Fail Setting
		Hold	
		Dimmer	
		Program	
	6. Backlight Time	5S	Backlight Time Setting
		10S	
		20S	
		30S	
		ON	
	7. Lock	**On**	Display Lock Setting
		Off	
	8. Factory	Yes	Reset Factory Defaults
		No	
7. Information		V: x.x T: xx°C	Fixture Information
		Fan: xxxx rpm	
		Work Time: xxxxxh	
		UID: 09A5xxxxxxxx	

6 channel mode:

Channel	Value	Function
CH1	000-255	Red dimmer (0-100%)
CH2	000-255	Green dimmer (0-100%)
CH3	000-255	Blue dimmer (0-100%)
CH4	000-255	Amber dimmer (0-100%)
CH5	000-255	Lime dimmer (0-100%)
CH6	000-255	Cyan dimmer (0-100%)

8 channel mode:

Channel	Value	Function
CH1	000-255	Master dimmer (0-100%)
CH2	000-004	No function
	005-127	Strobe (slow-fast)
	128-189	Random strobe (slow-fast)
	190-255	Random zone strobe (slow-fast)
CH3	000-255	Red dimmer (0-100%)
CH4	000-255	Green dimmer (0-100%)
CH5	000-255	Blue dimmer (0-100%)
CH6	000-255	Amber dimmer (0-100%)
CH7	000-255	Lime dimmer (0-100%)
CH8	000-255	Cyan dimmer (0-100%)

12 channel mode:

Channel	Value	Function
CH1	000-255	Master dimmer (0-100%)
CH2	000-004	No function
	005-127	Strobe (slow-fast)
	128-189	Random strobe (slow-fast)
	190-255	Random zone strobe (slow-fast)
CH3	000-005	No function
	006-010	Colour 1 (R255 G000 B000 A000 L000 C000)
	011-015	Colour 2 (R255 G000 B000 A100 L000 C000)
	016-020	Colour 3 (R255 G000 B000 A200 L000 C000)
	021-025	Colour 4 (R255 G050 B000 A000 L000 C000)
	026-030	Colour 5 (R255 G150 B000 A000 L000 C000)
	031-035	Colour 6 (R255 G255 B000 A000 L000 C000)
	036-040	Colour 7 (R255 G255 B000 A075 L000 C000)
	041-045	Colour 8 (R000 G255 B000 A255 L000 C000)
	046-050	Colour 9 (R000 G255 B000 A150 L000 C000)
	051-055	Colour 10 (R000 G255 B000 A050 L000 C000)
	056-060	Colour 11 (R000 G255 B000 A000 L000 C000)
	061-065	Colour 12 (R000 G255 B050 A000 L000 C000)
	066-070	Colour 13 (R000 G255 B150 A000 L000 C000)
	071-075	Colour 14 (R000 G255 B255 A000 L000 C000)
	076-080	Colour 15 (R000 G255 B255 A075 L000 C000)
	081-085	Colour 16 (R000 G255 B255 A150 L000 C000)
	086-090	Colour 17 (R000 G100 B255 A255 L000 C000)
	091-095	Colour 18 (R000 G000 B255 A100 L000 C000)
	096-100	Colour 19 (R000 G000 B255 A050 L000 C000)
	101-105	Colour 20 (R000 G000 B255 A000 L000 C000)
	106-110	Colour 21 (R075 G000 B255 A000 L000 C000)
	111-115	Colour 22 (R160 G000 B255 A000 L000 C000)
	116-120	Colour 23 (R255 G000 B255 A000 L000 C000)
	121-125	Colour 24 (R255 G000 B175 A000 L000 C000)
	126-130	Colour 25 (R255 G000 B100 A000 L000 C000)
	131-135	Colour 26 (R255 G000 B100 A050 L000 C000)
	136-140	Colour 27 (R255 G000 B025 A050 L000 C000)
	141-145	Colour 28 (R255 G000 B025 A025 L000 C000)
	146-150	Colour 29 (R255 G000 B025 A000 L000 C000)
	151-155	Colour 30 (R000 G000 B000 A255 L000 C000)
	156-160	Colour 31 (R000 G000 B000 A000 L255 C000)
	161-165	Colour 32 (R000 G000 B000 A000 L000 C255)
	166-170	Colour 33 (R255 G255 B255 A255 L255 C255)

12 channel mode (cont.):

Channel	Value	Function	
CH3	171-175	Colour Pattern 1	
	176-180	Colour Pattern 2	
	181-185	Colour Pattern 3	
	186-190	Colour Pattern 4	
	191-195	Colour Pattern 5	
	196-200	Colour Pattern 6	
	201-205	Colour Pattern 7	
	206-210	Colour Pattern 8	
	211-215	Colour Pattern 9	
	216-220	Colour Pattern 10	
	221-225	Colour Pattern 11	
	226-230	Colour Pattern 12	
	231-235	Colour Pattern 13	
	236-255	Colour Pattern 14	
CH4	000-005	No function	
	006-014	Program jump 1	Only when CH3 is between 006-255
	015-023	Program jump 2	
	024-032	Program jump 3	
	033-041	Program jump 4	
	042-050	Program jump 5	
	051-059	Program jump 6	
	060-068	Program jump 7	
	069-077	Program jump 8	
	078-086	Program jump 9	
	087-095	Program fade 1	
	096-104	Program fade 2	
	105-113	Program fade 3	
	114-122	Program fade 4	
	123-131	Program fade 5	
	132-140	Program fade 6	
	141-149	Program fade 7	
	150-158	Program fade 8	
	159-167	Program fade 9	
	168-176	Program macro jump 1	
	177-185	Program macro jump 2	
	186-194	Program macro jump 3	
	195-203	Program macro jump 4	
	204-212	Program macro fade 1	
	213-221	Program macro fade 2	
	222-230	Program macro fade 3	
	231-255	Program macro fade 4	

12 channel mode (cont.):

Channel	Value	Function
CH5	000-255	Speed (slow-fast)
CH6	000-255	Red dimmer (0-100%)
CH7	000-255	Green dimmer (0-100%)
CH8	000-255	Blue dimmer (0-100%)
CH9	000-255	Amber dimmer (0-100%)
CH10	000-255	Lime dimmer (0-100%)
CH11	000-255	Cyan dimmer (0-100%)
CH12 (Hold for 2 secs)	000-015	No function
	016-039	Dimmer fast
	040-063	Dimmer slow
	064-087	Linear
	088-111	Square law
	112-135	Inv square law
	136-159	S-Type
	160-183	Refresh rate 1kHz
	184-207	Refresh rate 3kHz
	208-231	Refresh rate 6kHz
	232-255	Refresh rate 12kHz

18 channel mode:

Channel	Value	Function
CH1	000-255	Red dimmer 1 (0-100%)
CH2	000-255	Green dimmer 1 (0-100%)
CH3	000-255	Blue dimmer 1 (0-100%)
CH4	000-255	Amber dimmer 1 (0-100%)
CH5	000-255	Lime dimmer 1 (0-100%)
CH6	000-255	Cyan dimmer 1 (0-100%)
CH7	000-255	Red dimmer 2 (0-100%)
CH8	000-255	Green dimmer 2 (0-100%)
CH9	000-255	Blue dimmer 2 (0-100%)
CH10	000-255	Amber dimmer 2 (0-100%)
CH11	000-255	Lime dimmer 2 (0-100%)
CH12	000-255	Cyan dimmer 2 (0-100%)
CH13	000-255	Red dimmer 3 (0-100%)
CH14	000-255	Green dimmer 3 (0-100%)
CH15	000-255	Blue dimmer 3 (0-100%)
CH16	000-255	Amber dimmer 3 (0-100%)
CH17	000-255	Lime dimmer 3 (0-100%)
CH18	000-255	Cyan dimmer 3 (0-100%)

20 channel mode:

Channel	Value	Function
CH1	000-255	Master dimmer (0-100%)
CH2	000-004	No function
	005-127	Strobe (slow-fast)
	128-189	Random strobe (slow-fast)
	190-255	Random zone strobe (slow-fast)
CH3	000-255	Red dimmer 1 (0-100%)
CH4	000-255	Green dimmer 1 (0-100%)
CH5	000-255	Blue dimmer 1 (0-100%)
CH6	000-255	Amber dimmer 1 (0-100%)
CH7	000-255	Lime dimmer 1 (0-100%)
CH8	000-255	Cyan dimmer 1 (0-100%)
CH9	000-255	Red dimmer 2 (0-100%)
CH10	000-255	Green dimmer 2 (0-100%)
CH11	000-255	Blue dimmer 2 (0-100%)
CH12	000-255	Amber dimmer 2 (0-100%)
CH13	000-255	Lime dimmer 2 (0-100%)
CH14	000-255	Cyan dimmer 2 (0-100%)
CH15	000-255	Red dimmer 3 (0-100%)
CH16	000-255	Green dimmer 3 (0-100%)

20 channel mode (cont.):

Channel	Value	Function
CH17	000-255	Blue dimmer 3 (0-100%)
CH18	000-255	Amber dimmer 3 (0-100%)
CH19	000-255	Lime dimmer 3 (0-100%)
CH20	000-255	Cyan dimmer 3 (0-100%)

30 channel mode:

Channel	Value	Function
CH1	000-255	Master dimmer (0-100%)
CH2	000-004	No function
	005-127	Strobe (slow-fast)
	128-189	Random strobe (slow-fast)
	190-255	Random zone strobe (slow-fast)
CH3	000-005	No function
	006-010	Colour 1 (R255 G000 B000 A000 L000 C000)
	011-015	Colour 2 (R255 G000 B000 A100 L000 C000)
	016-020	Colour 3 (R255 G000 B000 A200 L000 C000)
	021-025	Colour 4 (R255 G050 B000 A000 L000 C000)
	026-030	Colour 5 (R255 G150 B000 A000 L000 C000)
	031-035	Colour 6 (R255 G255 B000 A000 L000 C000)
	036-040	Colour 7 (R255 G255 B000 A075 L000 C000)
	041-045	Colour 8 (R000 G255 B000 A255 L000 C000)
	046-050	Colour 9 (R000 G255 B000 A150 L000 C000)
	051-055	Colour 10 (R000 G255 B000 A050 L000 C000)
	056-060	Colour 11 (R000 G255 B000 A000 L000 C000)
	061-065	Colour 12 (R000 G255 B050 A000 L000 C000)
	066-070	Colour 13 (R000 G255 B150 A000 L000 C000)
	071-075	Colour 14 (R000 G255 B255 A000 L000 C000)
	076-080	Colour 15 (R000 G255 B255 A075 L000 C000)
	081-085	Colour 16 (R000 G255 B255 A150 L000 C000)
	086-090	Colour 17 (R000 G100 B255 A255 L000 C000)
	091-095	Colour 18 (R000 G000 B255 A100 L000 C000)
	096-100	Colour 19 (R000 G000 B255 A050 L000 C000)
	101-105	Colour 20 (R000 G000 B255 A000 L000 C000)
	106-110	Colour 21 (R075 G000 B255 A000 L000 C000)
	111-115	Colour 22 (R160 G000 B255 A000 L000 C000)
	116-120	Colour 23 (R255 G000 B255 A000 L000 C000)
	121-125	Colour 24 (R255 G000 B175 A000 L000 C000)
	126-130	Colour 25 (R255 G000 B100 A000 L000 C000)
	131-135	Colour 26 (R255 G000 B100 A050 L000 C000)
	136-140	Colour 27 (R255 G000 B025 A050 L000 C000)
	141-145	Colour 28 (R255 G000 B025 A025 L000 C000)
	146-150	Colour 29 (R255 G000 B025 A000 L000 C000)
	151-155	Colour 30 (R000 G000 B000 A255 L000 C000)
	156-160	Colour 31 (R000 G000 B000 A000 L255 C000)
	161-165	Colour 32 (R000 G000 B000 A000 L000 C255)
	166-170	Colour 33 (R255 G255 B255 A255 L255 C255)

30 channel mode (cont.):

Channel	Value	Function	
CH3	171-175	Colour Pattern 1	
	176-180	Colour Pattern 2	
	181-185	Colour Pattern 3	
	186-190	Colour Pattern 4	
	191-195	Colour Pattern 5	
	196-200	Colour Pattern 6	
	201-205	Colour Pattern 7	
	206-210	Colour Pattern 8	
	211-215	Colour Pattern 9	
	216-220	Colour Pattern 10	
	221-225	Colour Pattern 11	
	226-230	Colour Pattern 12	
	231-235	Colour Pattern 13	
	236-255	Colour Pattern 14	
CH4	000-005	No function	
	006-014	Program jump 1	Only when CH3 is between 006-255
	015-023	Program jump 2	
	024-032	Program jump 3	
	033-041	Program jump 4	
	042-050	Program jump 5	
	051-059	Program jump 6	
	060-068	Program jump 7	
	069-077	Program jump 8	
	078-086	Program jump 9	
	087-095	Program fade 1	
	096-104	Program fade 2	
	105-113	Program fade 3	
	114-122	Program fade 4	
	123-131	Program fade 5	
	132-140	Program fade 6	
	141-149	Program fade 7	
	150-158	Program fade 8	
	159-167	Program fade 9	
	168-176	Program macro jump 1	
	177-185	Program macro jump 2	
	186-194	Program macro jump 3	
	195-203	Program macro jump 4	
	204-212	Program macro fade 1	
	213-221	Program macro fade 2	
	222-230	Program macro fade 3	
	231-255	Program macro fade 4	

30 channel mode (cont.):

Channel	Value	Function
CH5	000-255	Speed (slow-fast)
CH6	000-255	Red master dimmer (0-100%)
CH7	000-255	Green master dimmer (0-100%)
CH8	000-255	Blue master dimmer (0-100%)
CH9	000-255	Amber master dimmer (0-100%)
CH10	000-255	Lime master dimmer (0-100%)
CH11	000-255	Cyan master dimmer (0-100%)
CH12	000-255	Red dimmer 1 (0-100%)
CH13	000-255	Green dimmer 1 (0-100%)
CH14	000-255	Blue dimmer 1 (0-100%)
CH15	000-255	Amber dimmer 1 (0-100%)
CH16	000-255	Lime dimmer 1 (0-100%)
CH17	000-255	Cyan dimmer 1 (0-100%)
CH18	000-255	Red dimmer 2 (0-100%)
CH19	000-255	Green dimmer 2 (0-100%)
CH20	000-255	Blue dimmer 2 (0-100%)
CH21	000-255	Amber dimmer 2 (0-100%)
CH22	000-255	Lime dimmer 2 (0-100%)
CH23	000-255	Cyan dimmer 2 (0-100%)
CH24	000-255	Red dimmer 3 (0-100%)
CH25	000-255	Green dimmer 3 (0-100%)
CH26	000-255	Blue dimmer 3 (0-100%)
CH27	000-255	Amber dimmer 3 (0-100%)
CH28	000-255	Lime dimmer 3 (0-100%)
CH29	000-255	Cyan dimmer 3 (0-100%)
CH30 (Hold for 2 secs)	000-015	No function
	016-039	Dimmer fast
	040-063	Dimmer slow
	064-087	Linear
	088-111	Square law
	112-135	Inv square law
	136-159	S-Type
	160-183	Refresh rate 1kHz
	184-207	Refresh rate 3kHz
	208-231	Refresh rate 6kHz
	232-255	Refresh rate 12kHz

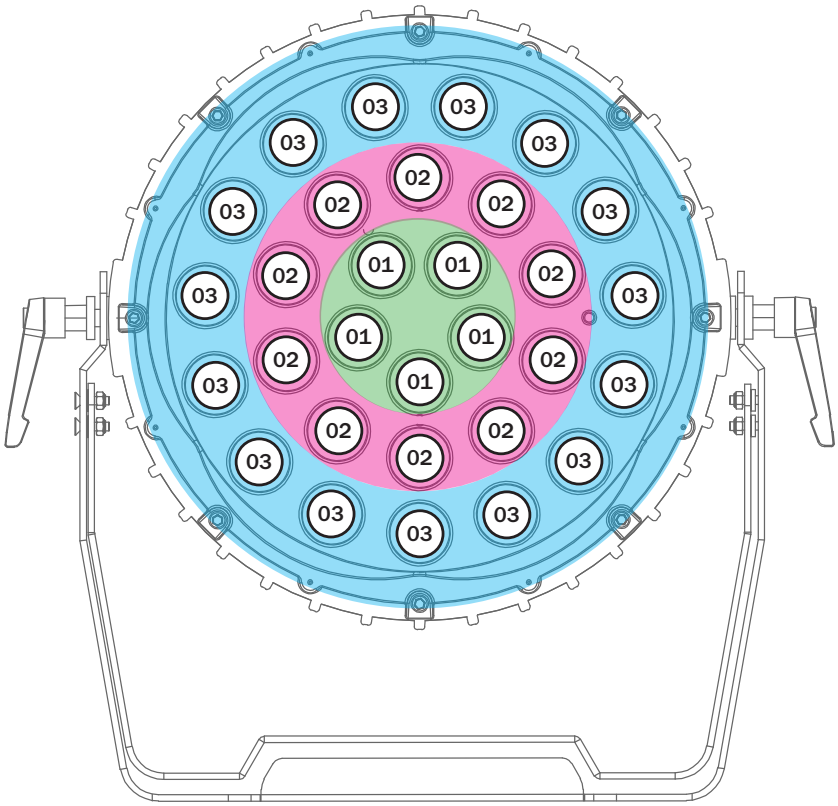
03
03
03
03
03
02
02
02
03
03
02
01
01
02
03
03
01
01
02
03
03
02
01
02
03
03
02
02
03
03
03
03

Setting the DMX address:

The DMX mode enables the use of a universal DMX controller. Each fixture requires a “start address” from 1- 512. A fixture requiring one or more channels for control begins to read the data on the channel indicated by the start address. For example, a fixture that occupies or uses 7 channels of DMX and was addressed to start on DMX channel 100, would read data from channels: 100, 101, 102, 103, 104, 105 and 106. Choose a start address so that the channels used do not overlap. E.g. the next unit in the chain starts at 107.

DMX 512:

DMX (Digital Multiplex) is a universal protocol used as a form of communication between intelligent fixtures and controllers. A DMX controller sends DMX data instructions from the controller to the fixture. DMX data is sent as serial data that travels from fixture to fixture via the DATA “IN” and DATA “OUT” XLR terminals located on all DMX fixtures (most controllers only have a data “out” terminal).

DMX linking:

DMX is a language allowing all makes and models of different manufacturers to be linked together and operate from a single controller, as long as all fixtures and the controller are DMX compliant. To ensure proper DMX data transmission, when using several DMX fixtures try to use the shortest cable path possible. The order in which fixtures are connected in a DMX line does not influence the DMX addressing. For example; a fixture assigned to a DMX address of 1 may be placed anywhere in a DMX line, at the beginning, at the end, or anywhere in the middle. When a fixture is assigned a DMX address of 1, the DMX controller knows to send DATA assigned to address 1 to that unit, no matter where it is located in the DMX chain.

DATA cable (DMX cable) requirements (for DMX operation):

This fixture can be controlled via DMX-512 protocol. The DMX address is set on the back of the unit. Your unit requires 5-pin XLR connector for data input/output, see images below.

Further DMX cables can be purchased from all good sound and lighting suppliers or Prolight Concepts dealers.
Please quote: 5-Pin: **CABL185 – 2m** **CABL187 – 5m** **CABL188 – 10m**

Also remember that DMX cable must be daisy chained and cannot be split.

Notice:

Be sure to follow the diagrams below when making your own cables. Do not connect the cables shield conductor to the ground lug or allow the shield conductor to come in contact with the XLRs outer casing. Grounding the shield could cause a short circuit and erratic behaviour.

Pin Configuration	
3-Pin	5-Pin
Pin 1 - Ground	
Pin 2 - Negative	
Pin 3 - Positive	
–	Pin 4 - N/C
–	Pin 5 - N/C

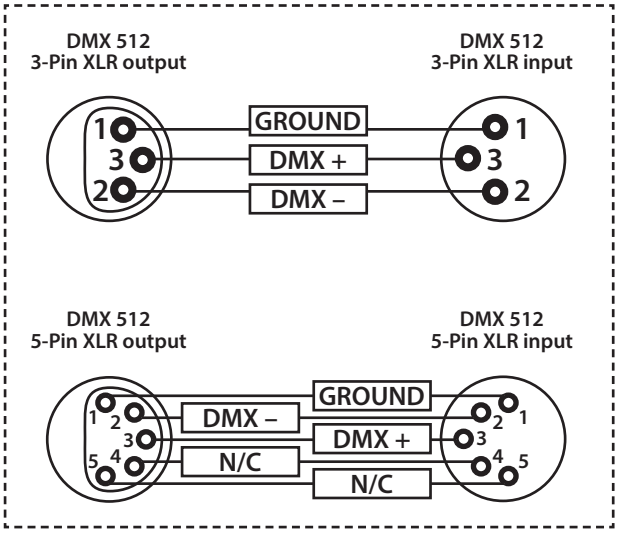

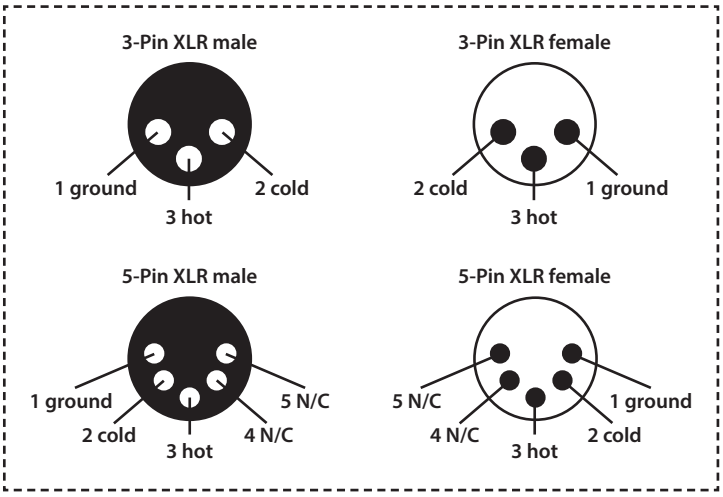

Line termination:

When longer runs of cable are used, you may need to use a terminator on the last unit to avoid erratic behaviour.

Using a cable terminator will decrease the possibilities of erratic behaviour. (3-pin - Order ref: CABL90, 5-pin - Order ref: CABL89)

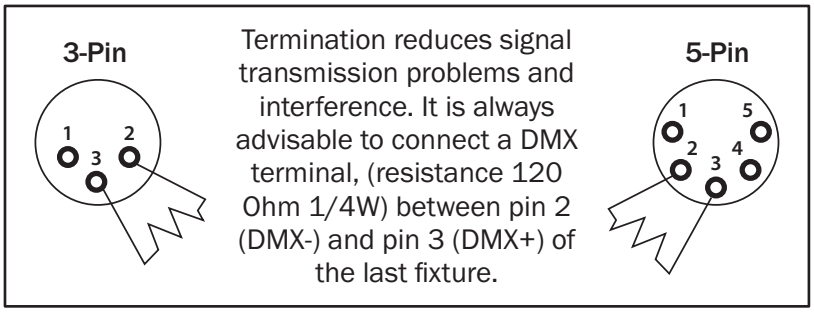

5-pin XLR DMX connectors:

Some manufacturers use 5-pin XLR connectors for data transmission in place of 3-pin. 5-pin XLR fixtures may be implemented in a 3-pin XLR DMX line. When inserting standard 5-pin XLR connectors in to a 3-pin line a cable adaptor must be used. The diagram below details the correct cable conversion.

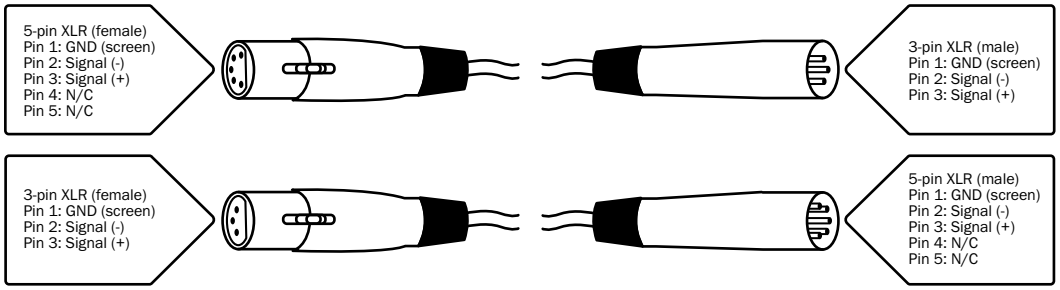

Power linking:

This fixture provides power linking via the power output on the rear allowing multiple units to be connected together. The maximum number of fixtures that can be connected is 12 fixtures @ 240V or 6 fixture @ 120V (including the first fixture). After the maximum number of fixtures are connected a new power run will need to be started.

Please note: Caution should be used when power linking other fixtures to the Spectra Par 30HEX20 PRO Exterior Fixture as the power consumption of other fixtures will vary. Fixtures fitted with lamps often require 2/3 times more current on startup, these may require their own power source.

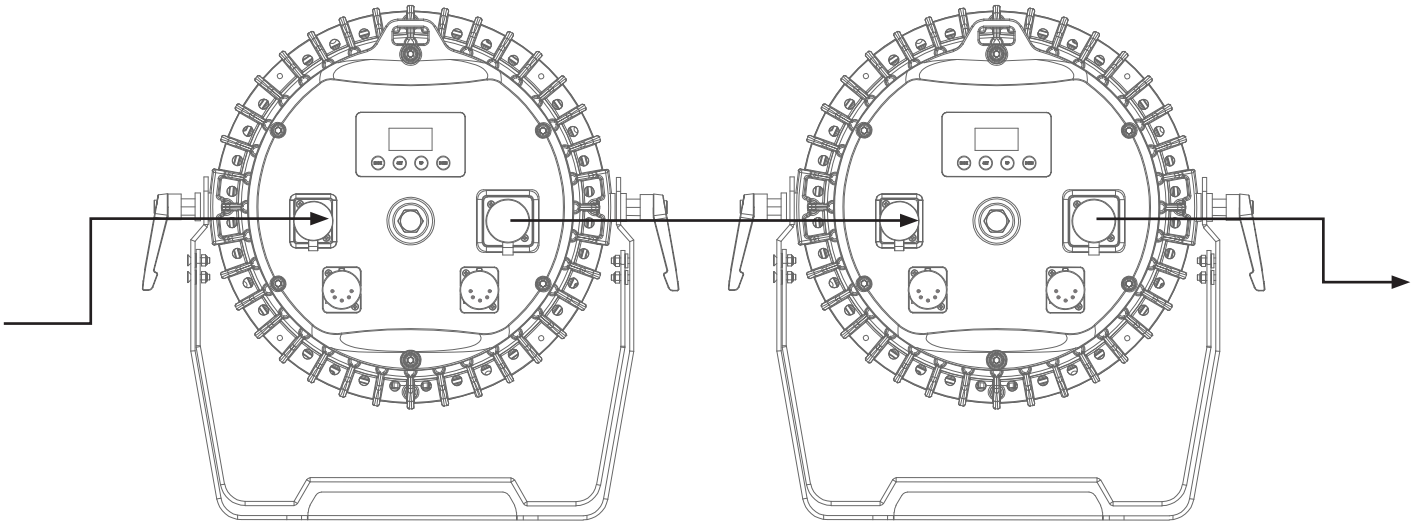

Correct Disposal of this Product (Waste Electrical & Electronic Equipment)

(Applicable in the European Union and other European countries with separate collection systems)

This marking shown on the product or its literature, indicates that it should not be disposed with other household wastes at the end of its working life. To prevent possible harm to the environment or human health from uncontrolled waste disposal, please separate this from other types of wastes and recycle it responsibly to promote the sustainable reuse of material resources.

Household users should contact either the retailer where they purchased this product, or their local government office, for details of where and how they can take this item for environmentally safe recycling.

Business users should contact their supplier and check the terms and conditions of the purchase contract. This product should not be mixed with other commercial wastes for disposal. This notice does not imply a requirement for the product to be returned to the manufacturer or supplier, disposal should be carried out via appropriate authorised recycling facilities in accordance with local regulations.