EQUINOX

Motif Gobo Projector

User Manual



Order codes:

EQLED500 - Black Housing

EQLED501 - White Housing

WARNING

FOR YOUR OWN SAFETY, PLEASE READ THIS USER MANUAL CAREFULLY BEFORE YOUR INITIAL START-UP!

- Before your initial start-up, please make sure that there is no damage caused during transportation.
- Should there be any damage, consult your dealer and do not use the equipment.
- To maintain the equipment in good working condition and to ensure safe operation, it is necessary for the user to follow the safety instructions and warning notes written in this manual.
- Please note that damages caused by user modifications to this equipment are not subject to warranty.



CAUTION!
KEEP THIS EQUIPMENT AWAY FROM RAIN, MOISTURE AND LIQUIDS



CAUTION!
TAKE CARE USING THIS EQUIPMENT!
HIGH VOLTAGE-RISK OF ELECTRIC SHOCK!!

IMPORTANT:

The manufacturer will not accept liability for any resulting damages caused by the non-observance of this manual or any unauthorised modification to the equipment.

- Never let the power cable come into contact with other cables. Handle the power cable and all mains voltage connections with particular caution!
- Never remove warning or informative labels from the unit.
- Do not open the equipment and do not modify the unit.
- Do not connect this equipment to a dimmer pack.
- Do not switch the equipment on and off in short intervals, as this will reduce the system's life.
- Only use the equipment indoors.
- Do not expose to flammable sources, liquids or gases.
- Always disconnect the power from the mains when equipment is not in use or before cleaning! Only handle the power-cable by the plug. Never pull out the plug by pulling the power-cable.
- Make sure that the available mains supply voltage is between 100~240V AC, 50/60Hz.
- Make sure that the power cable is never crimped or damaged. Check the equipment and the power cable periodically.
- If the equipment is dropped or damaged, disconnect the mains power supply immediately and have a qualified engineer inspect the equipment before operating again.
- This unit is not intended for fixed installation.
- If the equipment has been exposed to drastic temperature fluctuation (e.g. after transportation), do not connect power or switch it on immediately. The arising condensation might damage the equipment. Leave the equipment switched off until it has reached room temperature.
- If your product fails to function correctly, stop use immediately. Pack the unit securely (preferably in the original packing material), and return it to your Pro Light dealer for service.
- Only use fuses of same type and rating.
- Repairs, servicing and power connection must only be carried out by a qualified technician. THIS UNIT CONTAINS NO USER SERVICEABLE PARTS.
- This lighting fixture is for professional use only - it is not designed for or suitable for household use. The product must be installed by a qualified technician in accordance with local territory regulations. The safety of the installation is the responsibility of the installer. The fixture presents risks of severe injury or death due to fire hazards, electric shock and falls.
- Warning! Risk Group 2 LED product according to EN 62471. Do not view the light output with optical instruments or any device that may concentrate the beam.
- WARRANTY: One year from date of purchase.

OPERATING DETERMINATIONS

If this equipment is operated in any other way, than those described in this manual, the product may suffer damage and the warranty becomes void. Incorrect operation may lead to danger e.g: short-circuit, burns and electric shocks etc.

Do not endanger your own safety and the safety of others!

Incorrect installation or use can cause serious damage to people and/or property.

Please note: These fixtures are intended for stage lighting and entertainment applications only, and are not intended for extended periods of use, including but not limited to house-light, industrial or architectural applications and should only be operated with short duty cycles.

Motif Gobo Projector

The Eqinox Motif Gobo Projector is a sleek yet powerful gobo projector designed for professional use in events, rental, and installations. Optimised for projection distances of 1m to 6m, it features simple rear-panel control for gobo rotation, allowing users to choose static or one of four rotation speeds in either clockwise or anti-clockwise directions. The projector's 3m captive power cable enables discreet connection. The Motif delivers crisp, bright projection from its 40W 8000K white LED, all housed in a clean white chassis built for reliability and visual integration into modern venues.

- 1 x 40W white LED (8000K)
- Beam angle: 20°
- Manual focus
- User replaceable, rotating gobos
- Magnetic gobo holder for easy gobo changes
- Adjustable rotation CW/CCW with stop
- Maximum rotation speed: 2 RPM
- Supplied with hanging bracket with M12 mounting hole
- Captive power connection
- Fan cooled
- Housing Colour: black, white
- Gobo size: outer diameter 26.4mm, maximum image size 21mm



Specifications	Motif Gobo Projector
Power consumption	43W
Power supply	100~240V, 50/60Hz
Operating temperature:	-20° to +45°
Dimensions (body only)	110 x 148 x 270mm
Weight	1.5kg
Order code	EQLED500 - black housing EQLED501 - white housing

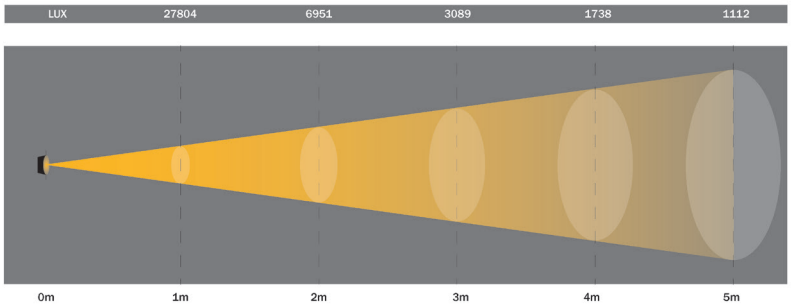

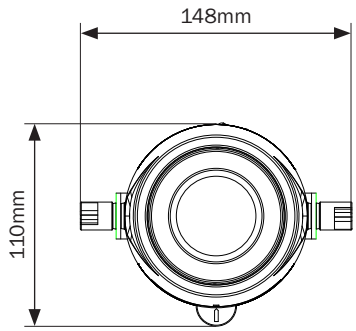

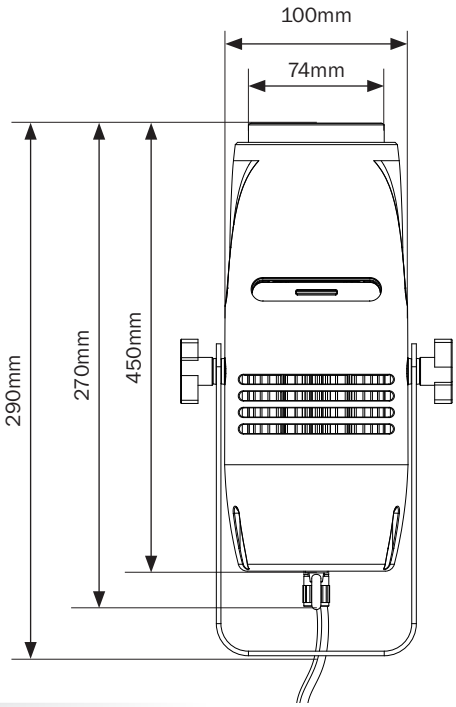

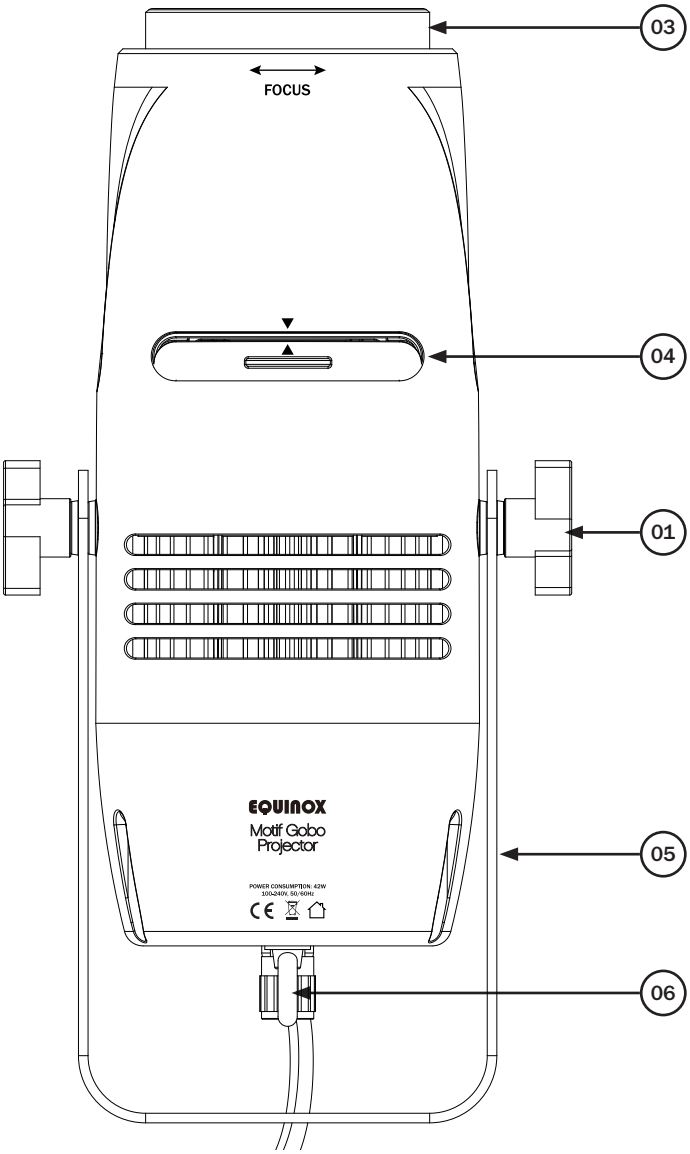

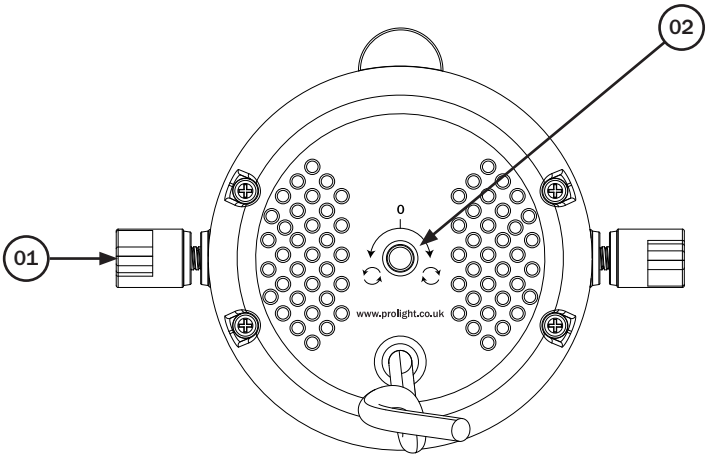

01 - Hanging bracket adjustment knob
02 - Rotary knob
03 - Manual focus
04 - Gobo access slot
05 - Hanging bracket
06 - Safety eye

In the box:
1 x fixture

Gobo replacement:

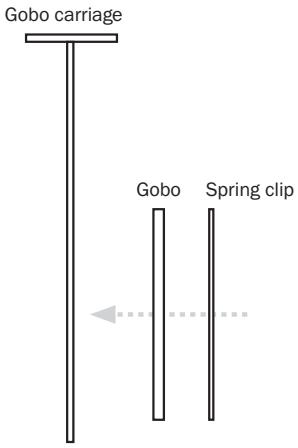

1. The Motif Gobo Projector is supplied with 7 rotaing gobo's. To replace the gobo first power off the fixture and leave to cool. Isolate the fixture from the mains voltage supply.
2. Carefully pull the gobo access door up out of the unit.
3. Place the gobo on a flat surface with the gear side down. Locate the tab of the spring clip using a precision pick (or similar) and push the spring clip upwards to release it and remove the spring clip.
4. Carefully remove the gobo from the holder avoiding scratching the gobo.
5. Install the new gobo and follow the previous steps in reverse order.

Install the gobo carriage into the fixture. Power on the fixture and adjust focus as required.

1.



2.



3.



4.



5.



Users may change the gobos supplied for a custom design of their own. Custom gobos can be made of metal, or glass. The image size for custom gobos should be no greater than 26.4mm and the maximum image size 21mm.



Manual operation:

1. Plug the fixture into a power source via the captive cable.
2. When the rotary knob is set to the 0 position, the projected image remains static (no rotation).
3. Rotating the knob clockwise increases the rotation speed in the clockwise direction.
4. Rotating the knob anti-clockwise increases the rotation speed in the anti-clockwise direction.

Focus:

Manual focus adjustment is done by turning the lens assembly on the front of the fixture.
Rotate the lens clockwise or anti-clockwise until the projected image is in focus.





Correct Disposal of this Product (Waste Electrical & Electronic Equipment)

(Applicable in the European Union and other European countries with separate collection systems)

This marking shown on the product or its literature, indicates that it should not be disposed of with other household wastes at the end of its working life. To prevent possible harm to the environment or human health from uncontrolled waste disposal, please separate this from other types of wastes and recycle it responsibly to promote the sustainable reuse of material resources.

Household users should contact either the retailer where they purchased this product, or their local government office, for details of where and how they can take this item for environmentally safe recycling.

Business users should contact their supplier and check the terms and conditions of the purchase contract. This product should not be mixed with other commercial wastes for disposal.